ALVOLTA
BUILT FOR POWER

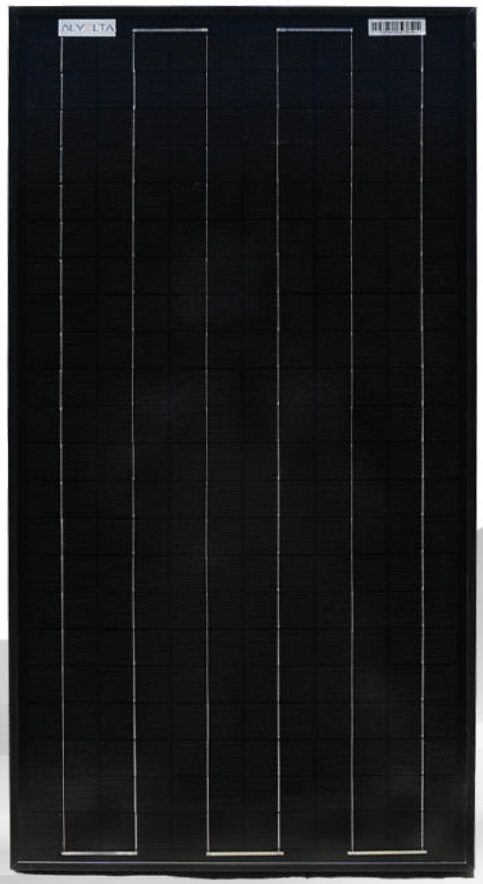

ALVOLTA ECLIPSE MAX 50W SOLAR PANEL

ALV-050SP-MAX

Key Features:

- Up to 22.7% module efficiency
- Weatherproof, IP65 sealed junction box
- Low voltage-temperature coefficient
- Sturdy, anodized aluminium frame
- Pre-wired 900mm cable with MC4 connectors

Suitable for:

5 YEAR PANEL WARRANTY

ALVOLTA
BUILT FOR POWER

ALVOLTA ECLIPSE MAX 50W SOLAR PANEL

ALV-050SP-MAX

Specifications:

Electrical	
Maximum Power (Pmax)	50W
Optimum Operating Voltage (Vmp)	78.3V
Optimum Operating Current (Imp)	0.64A
Open Circuit Voltage (Voc)	90.2V
Short Circuit Current (Isc)	0.68A
Module Efficiency	22.7%
Maximum System Voltage	600V DC
Power Tolerance	±3%
Thermal	
Operating Temperature Range	-40°C to +85°C
Temperature Coefficient (Pmax)	-0.35%/°C
Temperature Coefficient (Voc)	-0.275%/°C
Temperature Coefficient (Isc)	-0.045%/°C
Mechanical	
Solar Cells	Monocrystalline 182mm Cells
No. of Cells	132 (6 x 22)
Frame	Anodized Aluminium
Junction Box	IP65 Rated
Connectors	MC4 Style
Output Cables	4mm², 900mm
Dimensions (w x h x d)	760 x 410 x 35mm
Weight	3.36kg
Warranty	5 Years

RoHS 2011/ 65/ EU and amending directive (EU)2015/863

CE EN IEC 62368-1:2020+A11:2020

*All data and specifications provided in this datasheet are tested under standard test conditions, and may deviate marginally from actual values. Alvolta and its associates reserve the right to make modifications to the provided information without notice. Alvolta maintains the goal to supply customers with the most recent information regarding its products.

ALVOLTA
BUILT FOR POWER

ALVOLTA ECLIPSE MAX 50W SOLAR PANEL

ALV-050SP-MAX

Module Diagram:

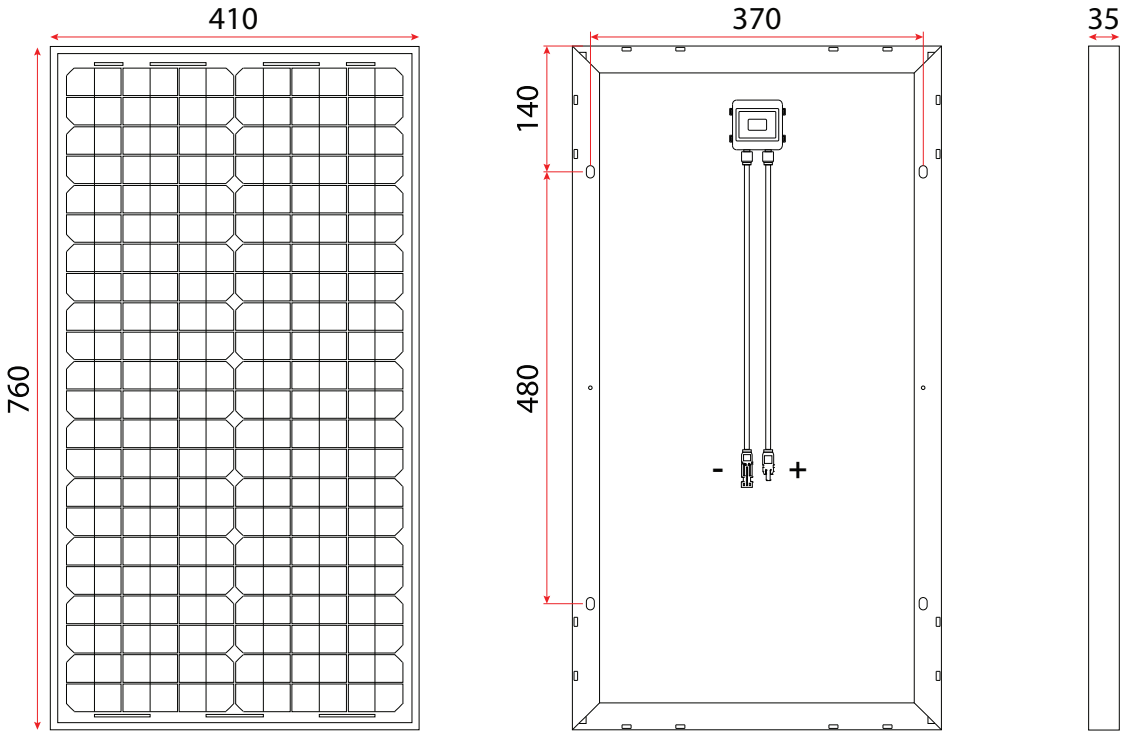

IV-Curve:

