MOUNTING TEMPLATE OPTION #1

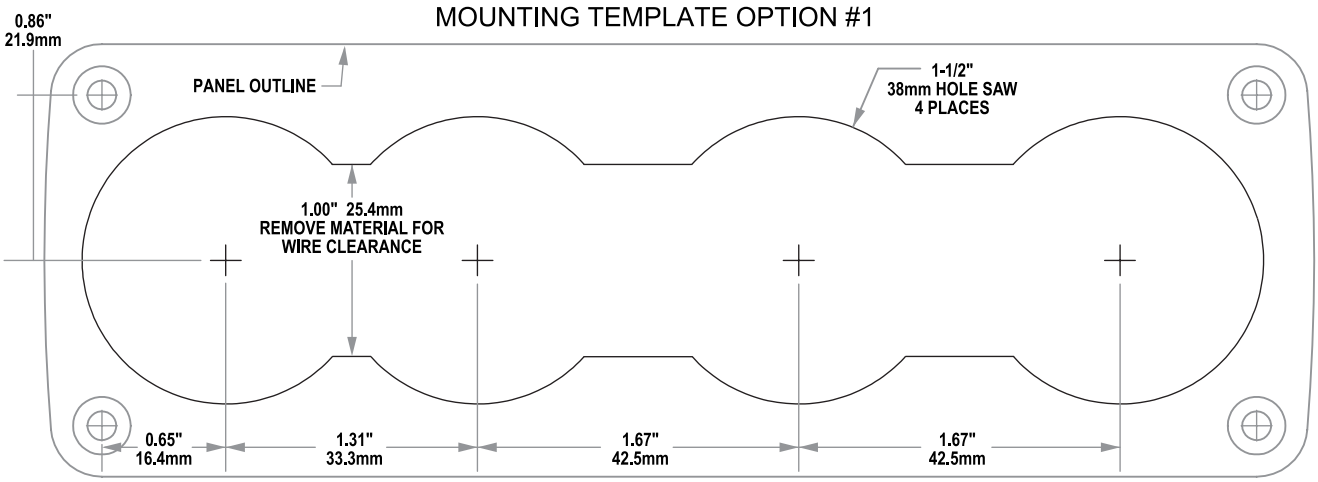
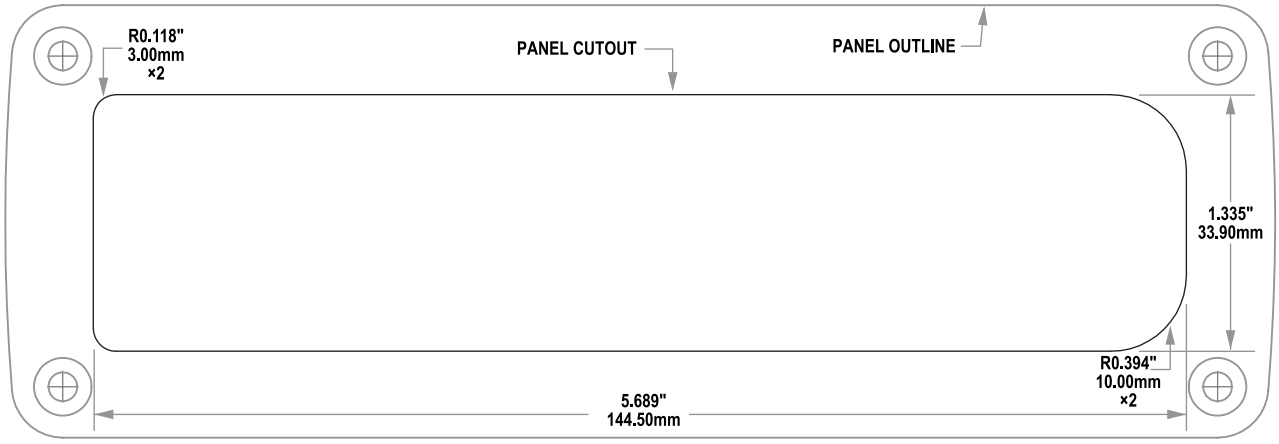
MOUNTING TEMPLATE OPTION #2