ALVOLTA
BUILT FOR POWER

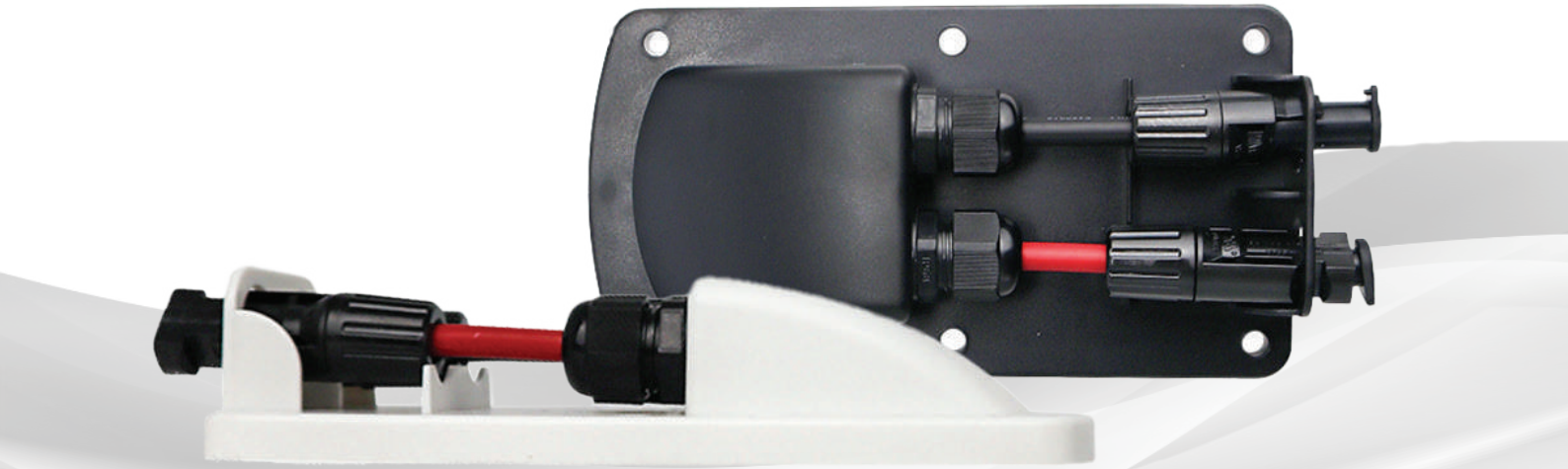

ALVOLTA PRE-WIRED DUAL ENTRY JUNCTION BOX

AMG1B & AMG1W

Key Features:

- Solar Connectors Included
- Easy Installation
- Weatherproof Cable Gland Entries
- UV Stablised Plastic
- Durable Design

Suitable for:

1 YEAR WARRANTY

ALVOLTA
BUILT FOR POWER

ALVOLTA PRE-WIRED DUAL ENTRY JUNCTION BOX

AMG1B & AMG1W

Specifications:

Model	AMG1B	AMG1W
Colour	Black	White
Cable Size	6mm²	
Protection Degree	IP68	
Recommended Adhesive	Sikaflex 252 or Alike	
Material	ABS Plastic	
Dimensions	192 x 105 x 50mm	
Warranty	1 Year	

Module Diagram:

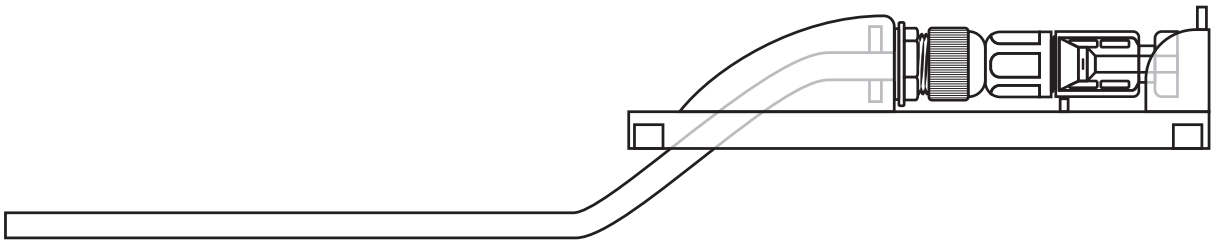

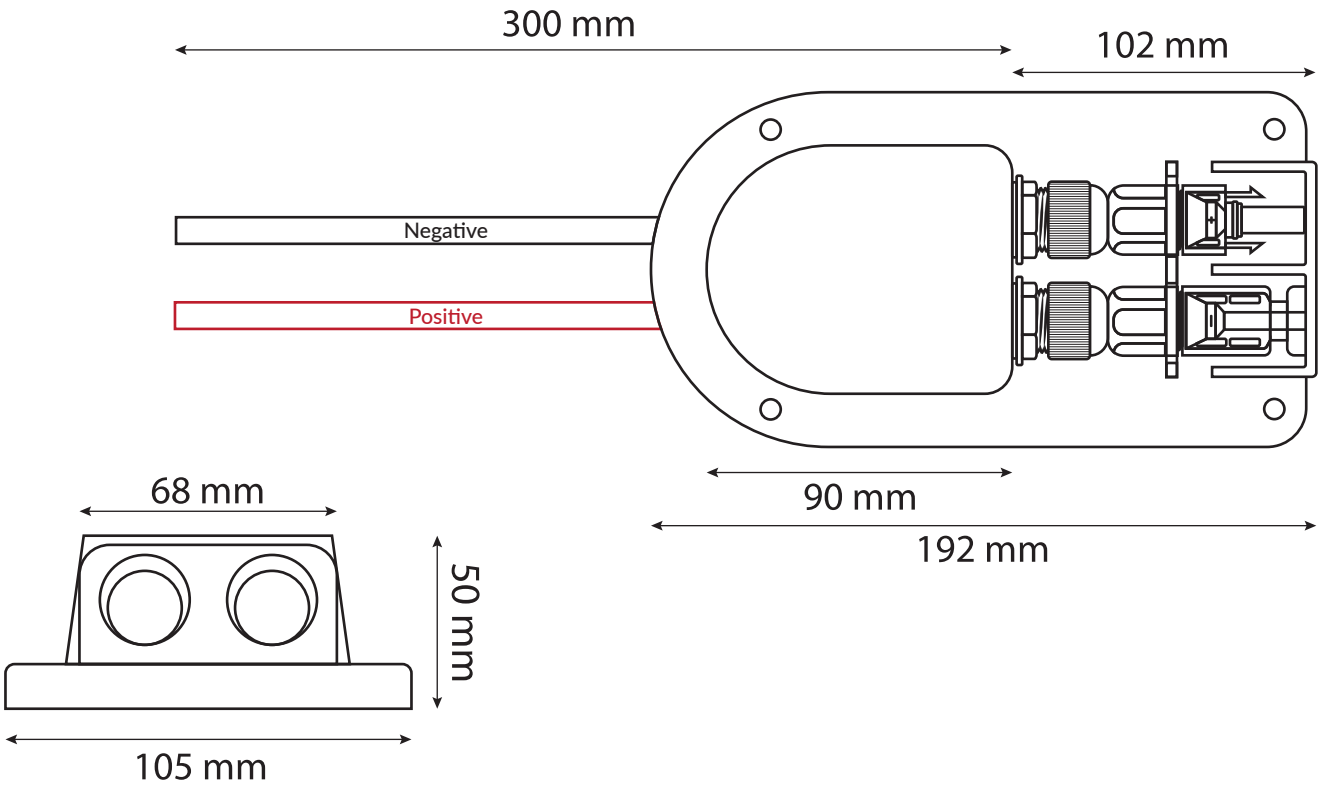

*All data and specifications provided in this datasheet are tested under standard test conditions, and may deviate marginally from actual values. Alvolta and its associates reserve the right to make modifications to the provided information without notice. Alvolta maintains the goal to supply customers with the most recent information regarding its products.