ALVOLTA
BUILT FOR POWER



ALVOLTA USB C+C DUAL FLUSH MOUNT SOCKET

ALV-USBCCFS

Key Features:

- QuickCharge Fast Charging
- Suits 12-24V Systems
- Compatible with Standard Smart Phones
- Pre-Wired for Installation
- Multiple Charging Ports

Suitable for:

1 YEAR WARRANTY

ALVOLTA
BUILT FOR POWER

ALVOLTA USB C+C DUAL FLUSH MOUNT SOCKET

ALV-USBCCFS

Specifications:

Input Voltage	12 / 24V
Maximum Output Power	120W
USB-C 1 Output	5V / 3A, 9V / 3A, 12V / 3A, 15V / 3A, 20V / 5A
USB-C 2 Output	5V / 3A, 9V / 2.22A, 12V / 1.67A
Included Cable	UL 1015 cable, 4mm² diameter, 100mm length
USB Impedance	< 100mΩ
Mounting Type	Flush Mount
Mounting Hole Size	4mm
Ingress Protection	IP65
Salt Spray Test	8 hr min, NaCl 5%
Operating Temperature Range	-25°C - +85°C
Housing Material	PA6 (Polyamide/Nylon 6)
Colour	Black
Dimensions (w x h x d)	61 x 43 x 60.2mm
Warranty	1 Year

Model Dimensions:

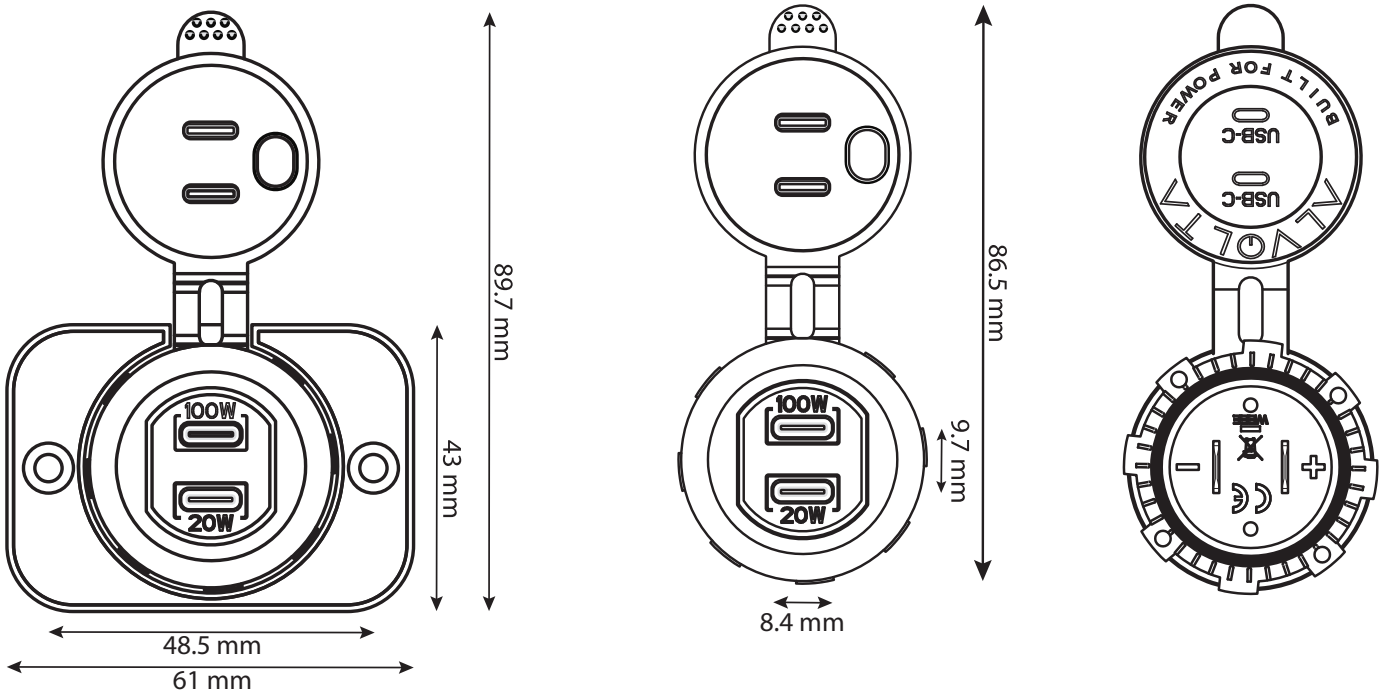

*All data and specifications provided in this datasheet are tested under standard test conditions, and may deviate marginally from actual values. Alvolta and its associates reserve the right to make modifications to the provided information without notice. Alvolta maintains the goal to supply customers with the most recent information regarding its products.

ALVOLTA USB C+C DUAL FLUSH MOUNT SOCKET

ALV-USBCCFS

Model Dimensions:

USB Module

