ALVOLTA

BUILT FOR POWER

OWNER'S MANUAL



ALVOLTA ORBIT 12V 30A DC-DC CHARGER

ALV-DC1212-30

TABLE OF CONTENTS

Safety Instructions 3
Overview 4
  Features 4
What's Included 5
Alvolta App 6
Interface & Indicators 7
  Main Interface 7
  RS485 Communication Interface 8
  TTL Communication Interface 8
  Remote On/Off 9
  Fault Alarms 10
  Button Function 10
  Indicator Lights 11
Specifications 12
Parameters 14
  Battery Parameters 14
  Alternator Parameters 14
Installation 15
  Pre-installation Precautions 15
  Wire & Fuse Selection 15
  Charger Installation 16
  Charging Mode Wiring 17
  Power Mode Wiring 19
Protection & Maintenance 21
  Protection Features 21
  System Maintenance 22
Troubleshooting 23
Warranty Info 24

DISCLAIMER

All data and specifications provided in this maunal are tested under standard test conditions, and may deviate marginally from actual values. Alvolta and its associates reserve the right to make modifications to the provided information without notice. Alvolta maintains the goal to supply customers with recent information regarding its products.

SAFETY INSTRUCTIONS

IMPORTANT, READ CAREFULLY & RETAIN FOR REFERENCE

- WARNING: It is very important to review this manual thoroughly before attempting installation.
- Do NOT exceed the electrical specifications of this device.
- Do NOT plug in any AC source to this DC-DC product. Doing so may result in fire or damage to the device.
- Do NOT leave the battery disconnected while a solar input is connected for an extended period of time. Doing so may result in damage to the unit.
- Ensure children are kept away from this device at all times.
- Take care when installing or working with batteries. Wear protective clothing and eyewear, and wash you hands when installation is complete. If contact with battery acid is made, rinse with water immediately.
- Ensure external metal objects are removed when working with batteries, and take care when using metal tools to work on batteries. If external metal objects are dropped into a battery, a short-circuit or damage to the battery may occur.
- Ensure the ambient environment is well ventilated, because the battery may produce acid gas when charging.
- Do NOT connect lithium batteries in reverse polarity. Doing so may result in fire or damage to the device.
- Stay away from sparks, as the battery may produce combustible gases.
- During outdoor installation, avoid direct sunlight and rainwater infiltration.
- Ensure that cable connections are tightened and cables are fixed in the system correctly. False connections and corroded cables may cause extreme heat that can melt the cable insulation, burn surrounding areas or cause a fire.
- Ensure the device is installed by competent and trained professionals where required.
- Ensure appropriately sized wiring, fuses and circuit protection devices are used in the installation of this device.
- Connecting live equipment to this device, such as solar panels or batteries, can cause arcing to occur. Ensure all devices are isolated prior to installation where possible and ensure appropriate PPE is worn at all times.

OVERVIEW

The Alvolta Orbit Charger is a high-performance, isolated DC-DC charger designed for 12V off-grid systems. Featuring selectable output, a high conversion efficiency and support for both lithium and lead-acid batteries, this DC-DC charger is suitable for a wide variety of 12V applications.

The isolated design provides electrical separation between the input and output terminals, preventing interference of current or voltage, thereby enhancing the system's stability and reliability. This charger offers two selectable operating modes: charging mode and power supply mode. It can charge batteries or function as a power supply to deliver power to loads.

The Alvolta Orbit Charger also supports monitoring, data logging, and parameter configuration through the Alvolta app, PC software, and other compatible communication interfaces, allowing users to manage the system locally or remotely.

FEATURES

- The charger is suitable for use in isolated power supply systems.
- Two available modes: charging mode and power supply mode.
- The power supply mode features a constant voltage output function with adjustable output voltage.
- The charging mode supports traditional alternators, smart alternators, and custom alternators.
- Supports multiple battery types including lithium batteries, sealed lead-acid batteries, flooded lead-acid, gel batteries and user-defined options.
- The charger features a built-in over-temperature protection mechanism, which switches the charging power to a linear decline when the temperature exceeds a set value.
- Uses a built-in 4.0BLE Bluetooth module, allowing for connection and interaction with the Alvolta app.
- The charger supports the standard Modbus protocol, allowing for technology support to facilitate secondary development and application integration.
- The charger is IP43 rated, ensuring it can operate reliably and efficiently in various working conditions.

WHAT'S INCLUDED

Box Inclusions:

	1x Orbit DC-DC Charger (30A, as per the box)
	1x Sensor Plug To connect cables for a on/off remote

ALVOLTA APP

The Alvolta Orbit DC-DC Charger features built-in Bluetooth, allowing for monitoring, data logging, and parameter configuration through the Alvolta app.

The Alvolta app is your ultimate companion for monitoring and managing your Alvolta 12V, DC-DC, and off-grid power systems. Built for power and designed for intuitive data display, the Alvolta app keeps you connected to your setup whether you're in a 4WD, RV, or other off-grid scenario.



DOWNLOAD ALVOLTA APP

GET IT ON Google Play

Download on the App Store

Note:

- When connecting components to the Alvolta App, a default PIN may be required. The default PIN is: 123456

INTERFACE & INDICATORS

MAIN INTERFACE

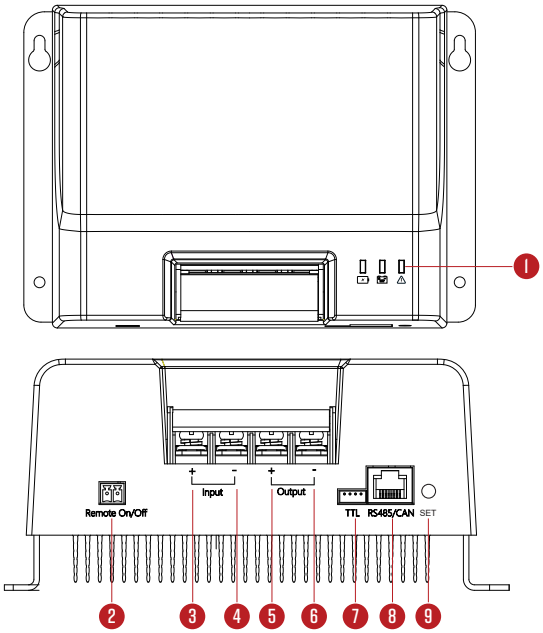

1	Status indicator
2	Remote ON/OFF interface
3	Input positive terminal (+)
4	Input negative terminal (-)
5	Output positive terminal (+)
6	Output negative terminal (-)
7	TTL communication interface
8	RJ45 interface (RS485 & CAN)
9	Button (to set the battery type)

RS485 COMMUNICATION INTERFACE

RS485 Communication
- 9600 baud, 8 data bits, no parity, 1 stop bit (9600 8N1)
- RJ45 communication power supply out
- 5V / 100mA

CAN Communication
- 250 kbps baud rate
- RV-C protocol

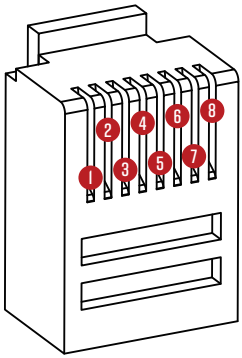

1	CAN_L
2	CAN_H
3	NC
4	NC
5	Power/signal ground
6	D-
7	D+
8	Positive terminal 5V/100mA

TTL COMMUNICATION INTERFACE

The Modbus protocol can be used to perform data monitoring, parameter setting and other operations for the charger via the TTL port.

TTL Communication
- 9600 baud, 8 data bits, no parity, 1 stop bit (9600 8N1)

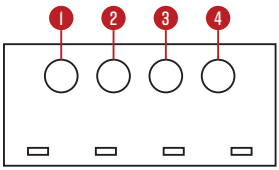

1	Communication power out
2	RX data receiving terminal
3	TX data sending terminal
4	GND

REMOTE ON/OFF

The charger features a remote switching interface that activates or deactivates the system based on circuit status. The charger operates normally when the remote interface terminals are short-circuited (closed). The charger stops operating when the interface terminals are open-circuited (open). Note that you can wire a standard mechanical switch, toggle, or relay to this interface to act as a physical start/stop control for the system.

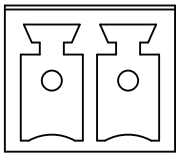

Remote ON/OFF Specifications:	
Switch State	Operation State
Open	No operation
Short Circuit	Normal operation

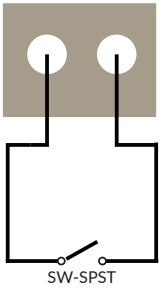

Application drawing 1:
external mechanical switch

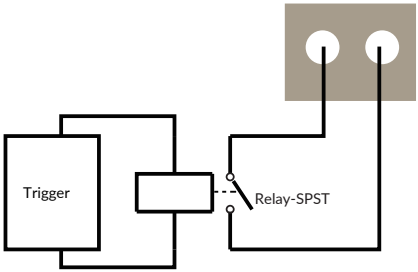

Application drawing 2: external relay switch

FAULT ALARMS

When a fault alarm occurs, the fault indicator light turns red, and the details of the fault can be viewed via the Alvolta app.

Fault Alarms Specifications:

Fault State	Description
High temperature protection	Temperature reaches over-temperature protection threshold; output/charging stops
Output over-load	Output over-load; output stops
Output short-circuit	Output short circuit; output/charging stops
Alternator over-voltage	Alternator voltage too high; charging stops
Battery over-voltage	Battery voltage too high; output/charging stops
Battery over-discharge	Battery voltage too low; no output under power mode
Battery not connected	No battery detected in charging mode

BUTTON FUNCTION

1. Set battery type

Press and hold the button for 8 seconds until the light begins flashing to enter setup mode (charging will temporarily pause). Press the button briefly to cycle through indicator colours until your battery type is displayed. To save and exit, hold the button for 8 seconds or wait 15 seconds without operations. The system will save the new profile and return to normal operation.

2. Factory reset

Press and hold the button for 20 seconds until the three red indicators flash. This restarts the charger and restores all parameters to their factory default values.

INDICATOR LIGHTS

Indicator Light Specifications:

Indicator Icon	Indicator Light	Indicator Colour	Light Indication	Indication Description
	Charging Icon	Green	Light On	Full charging
			Slow Flash	Absorption charging
			Single Flash	Floating charging
			Fast Flash	Equalising charging
			Double Flash	Current-limited charging
			Light Off	Not charging
	Power Mode Icon	Yellow	Light On	Output under power mode
			Light Off	No output
	Battery Type Icon	Red	Light On	Flooded lead-acid
		Yellow		Gel lead-acid
		Green		Sealed lead-acid
		Blue		12V lithium
		Cyan		48V lithium
		White		User-defined
	Fault Indicator	Red	Light On	Faulty operation
			Light Off	Normal operation

SPECIFICATIONS

Specifications:

Charging	
Input Voltage Range	10 - 16V
Alternator System Voltage	12V
Compatible Alternator Types	Traditional, Intelligent & Custom Alternators
Battery System Voltage	12V
Power	
Input Voltage Range	10 - 16V
Battery System Voltage	12V
Nominal Output Voltage	12.2V
Output Voltage Range	10 - 16V
Rated Output Current	30A
Compatible Battery Types	Lithium, Sealed Lead-Acid, Gel , Vented & Open Batteries
Connection Type	16-6mm Cable Lug
Maximum Cable Size	20mm²
Protection	
Battery Not Connected Alarm	Yes
Battery Under-Voltage Alarm	Yes
Battery Over-Discharge	Yes
Battery Over-Voltage	Yes
Generator Over-Voltage	Yes
Power Output Terminal Over-Voltage	Yes
Output Short-Circuit Protection	Yes
Internal Over-Temperature Protection	Yes
Internal Over-Temperature Alarm	Yes
Output Over-Load Protection	Yes
General	Yes
Static Power Consumption	Power Mode: <90mA @ 12V, Charging Mode: <30mA @ 12V
Communication	Bluetooth, TTL, RS485 and CAN (RV-C)
Remote On/Off	Yes
Maximum Conversion Efficiency	94%
Operating Temperature Range	-35°C - +65°C
Ingress Protection	IP43
Cooling Method	Natural heat dissipation
Colour	Black
Dimensions (w x h x d)	187 x 133.6 x 83.9mm
Weight	2.1kg
Warranty	3 Years

Model Dimensions:

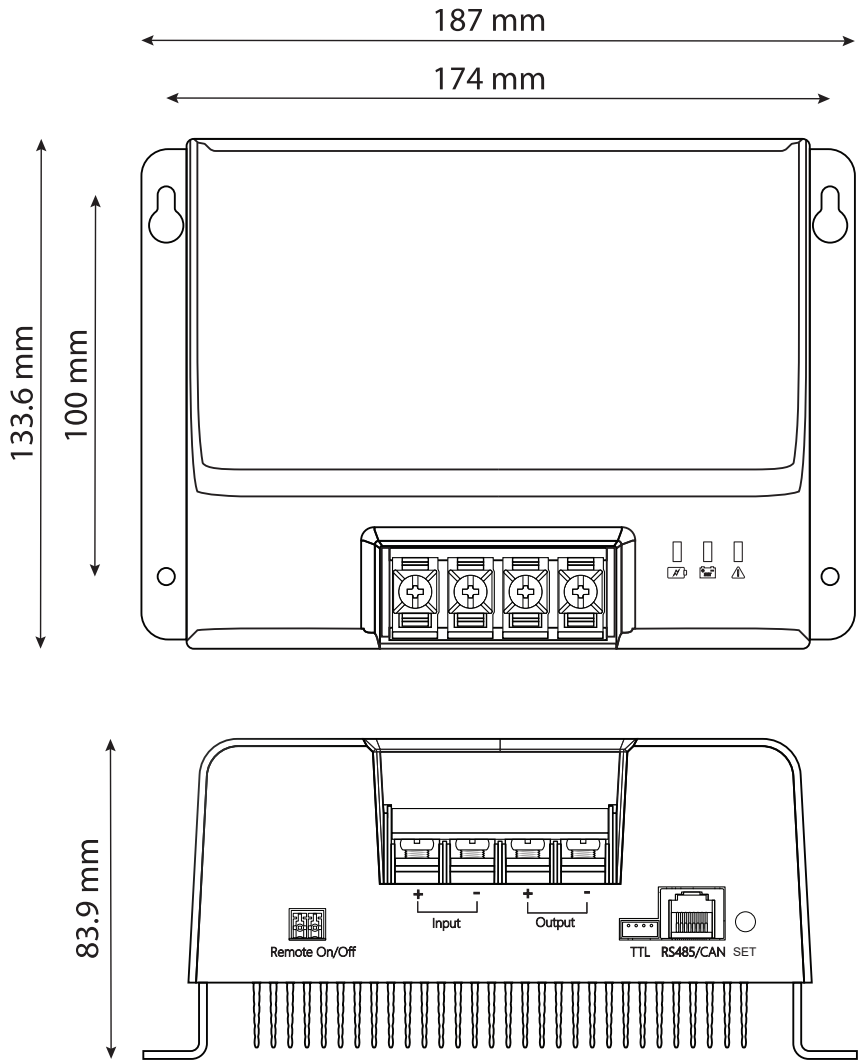

- Mounting hole size: 4.5mm

PARAMETERS

BATTERY PARAMETERS

Default Battery Voltage Parameters:

Battery Type	Lithium	Sealed Lead-Acid	Gel Lead-Acid	Flooded Lead-Acid	Custom Default Values
Over-voltage Disconnection Voltage	16.0 V	16.0 V	16.0 V	16.0 V	16.0 V
Over-voltage Recovery Voltage	15.0 V	15.0 V	15.0 V	15.0 V	15.0 V
Equalising Voltage	-	14.6 V	-	14.8 V	14.6 V
Absorption Voltage	14.4 V	14.4 V	14.2 V	14.6 V	14.4 V
Floating Voltage	-	13.8 V	13.8 V	13.8 V	13.8 V
Absorption Reconnect Voltage	13.2 V	13.2 V	13.2 V	13.2 V	13.2 V
Over-discharge Restoring Voltage	12.6 V	12.6 V	12.6 V	12.6 V	12.6 V
Under-voltage Alarming Voltage	12.0 V	12.0 V	12.0 V	12.0 V	12.0 V
Over-discharge Voltage	11.1V	11.1V	11.1V	11.1V	11.1V
Equalising Charging Interval	-	30 days	-	30 days	30 days
Equalising Charging Duration	-	120 min	-	120 min	120 min
Absorption Charging Duration	-	120 min	120 min	120 min	120 min

The above values are the parameters of the system at 25°C and 12V. If the system runs ar 24V or 48V, the relevant voltage points will be multiplied by 2 (for 24V), or 4 (for 48V).

ALTERNATOR PARAMETERS

Default Alternator Voltage Parameters:

Alternator Type	Traditional: Default Values	Intelligent	Custom: Default Values	Custom: Settings Range
Start Charging Voltage	13.2 V	12.0 V	13.2 V	11.0 - 16.0 V
Stop Charging Voltage	12.7 V	11.5 V	12.7 V	10.0 - 15.0 V

INSTALLATION

PRE-INSTALLATION PRECAUTIONS

- PV arrays may generate very high open circuit voltages. Disconnect the circuit breaker or fuse before wiring and be very careful during wiring. Ensure that solar panels are completely covered from sunlight during installation.
- Never install the charger and a vented battery in the same enclosed space.
- The battery terminals on the charger can be connected to either a single battery or a battery bank. Subsequent instructions in this manual apply to systems using a single battery, but are equally applicable to systems using a battery bank.
- Follow the safety recommendations of the battery manufacturer.
- Select the system connection cable with a current density of no less than 4A/mm².
- This device has a common negative design. If grounding is required, enure that the negative terminal is grounded.

WIRE AND FUSE SELECTION

Wiring and installation must meet the requirements of national and local electrical codes. The wire specifications for the Input and Output ends must be selected based on the parameter of rated current.

Please refer to the table below for wire and fuse specifications:

Wire and Fuse Selection Specifications:

Wire Gauge for Input	20 mm²*
Fuse Specification for Input	50A
Maximum Input Current	50A
Wire Gauge for Output	20 mm²*
Fuse Specification for Output	50A
Maximum Output Current	30A

**Circuit breaker lug required for cables above 16mm²*

- The above data in the table represents only some of the application scenarios of the charger. Actual selection should be based on the on-site configuration during actual usage.
- The current density of the wire should be around 5A/mm²
- The specifications of the fuse selected for the input end should be 1.5 - 2 times the actual maximum current.

CHARGER INSTALLATION

When installing the charger, ensure that the installation will provide adequate airflow around the charger, and reserve at least a 150mm space above and below the charger for natural convection cooling. If installed in a closed container, ensure there is reliable heat dissipation through the container.

1. Select an installation location

a. Choose a location that will avoid direct sunlight, minimise exposure to high temperatures, and is suitably ventilated.

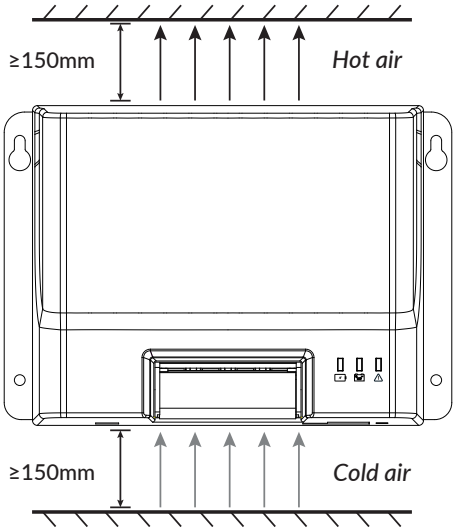

2. Install mounting screws

a. Mark the mounting position according to the mounting dimensions of the charger, drill two mounting holes of suitable size at the two marks and fix the screws on the two mounting holes.

3. Install the charger

a. Align the charger fixing holes with the two pre-fixed screws to hang the charger up, and then fix the two screws below.

4. Wire the charger

a. Open the front cover of the charger, wire, and then close the front cover.

CHARGING MODE WIRING

1. Connect the charger's Output end first

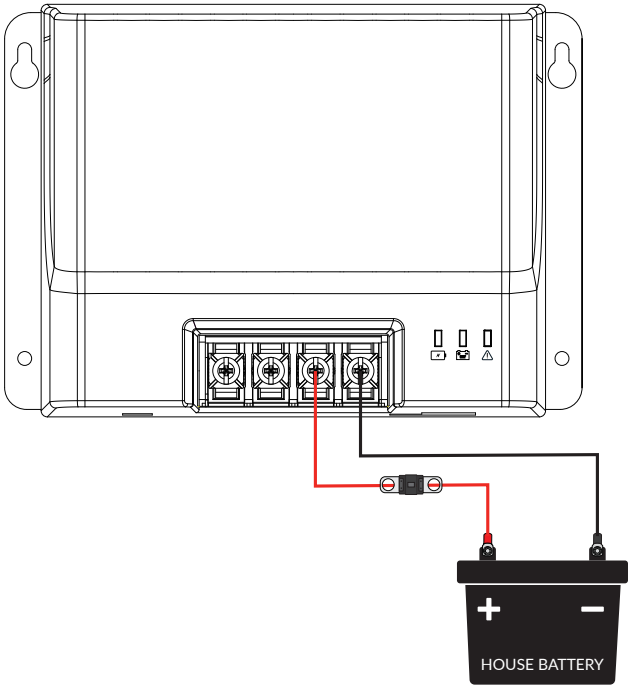

2. Connect the charger's Input end

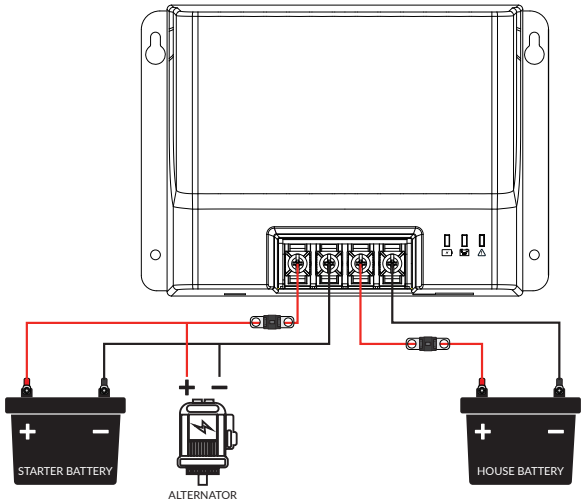

3. Check the connection status

a. Ensure that the remote on/off cables are connected, as shown in the figure below.

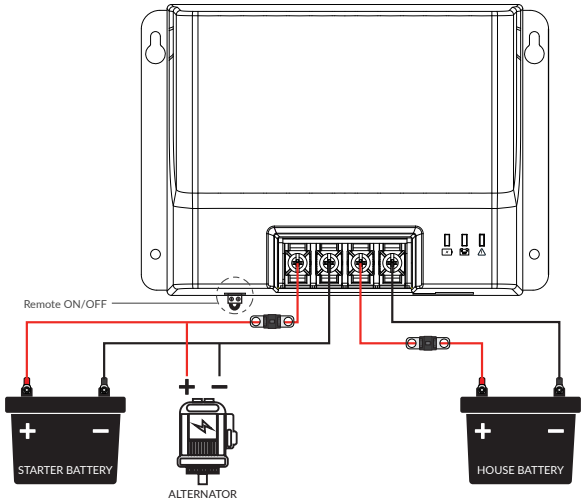

4. Install communication cables as needed

POWER MODE WIRING

1. Connect the charger's Output end first

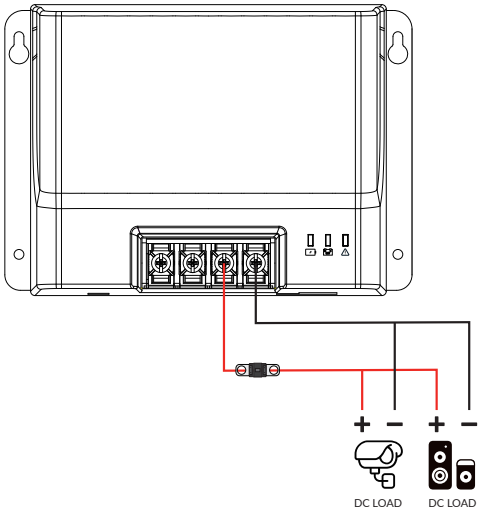

2. Connect the charger's Input end

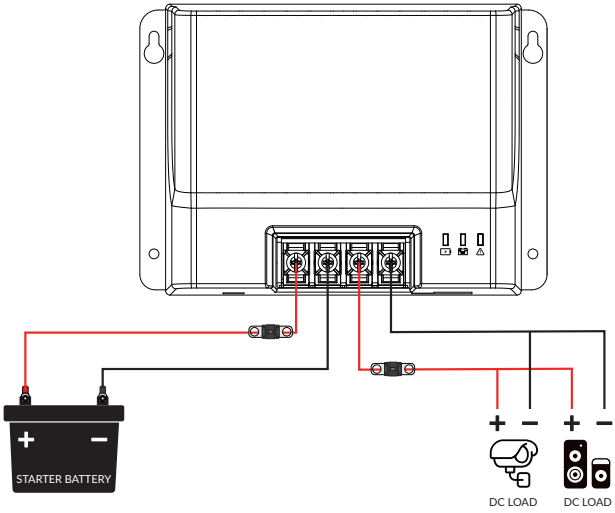

3. Check the connection status

a. Ensure that the remote on/off cables are connected, as shown in the figure below.

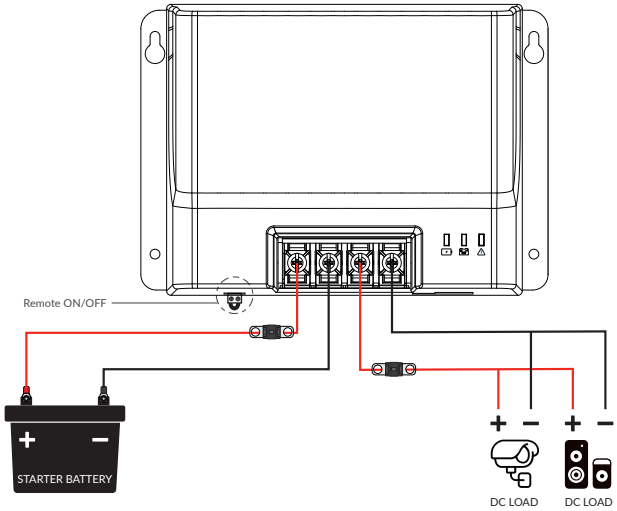

4. Install communication cables as needed

PROTECTION FEATURES

Waterproofing protection:
- IP43 rated

Over-temperature protection inside device:
- When the interior temperature of the charger is beyond the set value, the charger will reduce the charging power or stop the charging cycle to reduce the temperature of the charger.

Input power limited protection:
- When the power at the input terminal is higher than the rated value, the charger will limit the input within the rated power range to prevent damage by over current, and the charger enters the current-limiting charge mode.

Over-voltage of the input terminal:
- If the input voltage exceeds the set value, the charger will cut input from the input terminal.

Input short circuit protection:
- If the input voltage is short circuited, the charger will turn off charging; after short circuit is removed, charging will automatically recover.

SYSTEM MAINTENANCE

- In order to maintain the best long-term performance for chargers, it is recommended to conduct inspections twice a year.
- Make sure the airflow around the charger is not obstructed and remove any dirt or debris from the heat sink.
- Check if the insulation layers of all exposed cables are damaged due to sun exposure, friction with other objects nearby, dry rot, destruction of insects or rodents, etc. If so, it is necessary to repair or replace the cable.
- Verify if indicators are consistent with the device operations. Please note to take corrective actions for any malfunctions or error indications if necessary.
- Check all wiring terminals for corrosion, insulation damage, signs of high temperature or burning/discoloration.
- Tighten terminal screws.
- Check for dirt, insects nesting and corrosion and clean as required.
- If the lightning arrester has failed, replace it in time to protect the charger and other devices in the system from being damaged by lightning or electrical spikes.

Warning: To carry out any of the operations above, please ensure that all power to the charger has been disconnected. Afterwards, perform a final inspection and commence operation. Operation and maintenance should only be handled by trained professionals where necessary.

TROUBLESHOOTING

Common Troubleshooting:

Issue	Troubleshooting
The indicator light is not on	Check whether the input side is connected correctly, and whether the remote on/off is short-circuited correctly.
There is no output on the output side	Check the Alvolta app for any abnormal messages, whether output is prohibited, whether the battery is over-charged/undercharged, whether the charger is over-heated, and whether there is a short circuit or over-load.
The charging power is below the rated value	Check whether the current limit is over-temperature and whether the maximum output current value is correctly set through the Alvolta app, and is lower than the rated output current.

WARRANTY INFO

ALVOLTA
BUILT FOR POWER

3 YEAR WARRANTY

At Alvolta, we build all our gear for reliable power. We stand behind the quality and durability of our components. Our product development team rigorously tests our products to ensure they will perform in the Australian climate.

Our goods come with guarantees that cannot be excluded under the Australian Consumer Law. You are entitled to a replacement or refund for a major failure and compensation for any other reasonable foreseeable loss or damage. You are also entitled to have the goods repaired or replaced if the goods fail to be of acceptable quality and the failure does not amount to a major failure.

Alvolta warrants that our products are free from manufacturing defects in material and workmanship for the warranty period. The warranty commences on the date of purchase by the original purchaser. If a defect arises during the warranty period, we will repair, replace or provide an appropriate remedy in accordance with the Australian Consumer Law.

To access the benefits of this warranty, you must retain your proof of purchase and follow any other direction we reasonably give you.

Processing a Warranty Claim

If you believe your product is defective, it must be returned to us for inspection by our warranty claims department. Please contact our customer service team to provide details of the defect. They will assist you through the process of your warranty claim, including how to return the product for inspection.

Once we receive your returned product, our technicians will inspect it. We will then notify you of the outcome of your claim.

If we accept your warranty claim, we will either repair, replace or refund the goods at our discretion. We will also reimburse you for the shipping costs you incurred in sending the goods back to us. Any products that we choose to replace or refund become the property of our company.

If we do not accept your claim, we will advise you of the reason and hold your product for collection. You will need to arrange and pay for the product to be shipped back to you. If your product is not collected within 30 days of your warranty claim being finalised, we may destroy it.

Your warranty is voided if we (at our sole discretion) determine that there is evidence of one or more of the following:

Negligence: Improper installation, improper or extreme use, use that contravenes this instruction manual, etc.

Abuse: Road hazards, damage beyond the limits of “normal wear and tear.”

Unauthorised Repair: Repair service performed by an unauthorised service centre.

Disassembly: Any attempt to open, tamper with or otherwise compromise the integrity of the product.

Consequential Damage: Damage to this product caused by the failure of another component of the vehicle or device in which this product is installed.

Note regarding exterior finishes: we use the highest quality materials available, but depending on location, environment and exposure, the colour of exterior surfaces can fade. We will not approve any warranty claims that relate to colour fading.

Discontinued Items

Discontinued items that are still under warranty will be reviewed by our company. If a discontinued item is covered under warranty it may be replaced by an equivalent or superior item. If an equivalent item is not available our company will determine terms of resolution on a case-by-case basis.

ALVOLTA
BUILT FOR POWER

Alvolta Pty Ltd

Ph: 1800 577 408
Email: info@alvolta.com.au
Web: www.alvolta.com.au