ALVOLTA
BUILT FOR POWER

OWNER'S MANUAL



ALVOLTA 500A 60V BLUETOOTH SHUNT

ALV-500BT-SH

TABLE OF CONTENTS

Safety Instructions 3
Overview 4
Features 4
What's Included 5
Alvolta App 6
Interface & Indicators 7
Main Interface 7
RJ45 Communication Interface 8
Positive Terminal Interface 8
Indicator Lights 9
Specifications 10
Installation 12
Pre-installation Precautions 12
Shunt Installation 12
Monitoring the Battery 13
Monitoring the Main Battery & Starter Battery 16
Connect to the Data Acquisition Control Unit 17
Maintenance 18
System Maintenance 18
Troubleshooting 19
Warranty Info 20

DISCLAIMER

All data and specifications provided in this maunal are tested under standard test conditions, and may deviate marginally from actual values. Alvolta and its associates reserve the right to make modifications to the provided information without notice. Alvolta maintains the goal to supply customers with recent information regarding its products.

SAFETY INSTRUCTIONS

IMPORTANT, READ CAREFULLY & RETAIN FOR REFERENCE

- WARNING: It is very important to review this manual thoroughly before attempting installation.
- Do NOT exceed the electrical specifications of this device.
- Ensure children are kept away from this device at all times.
- Take care when installing or working with batteries. Wear protective clothing and eyewear, and wash you hands when installation is complete. If contact with battery acid is made, rinse with water immediately.
- Ensure external metal objects are removed when working with batteries, and take care when using metal tools to work on batteries. If external metal objects are dropped into a battery, a short-circuit or damage to the battery may occur.
- Ensure the ambient environment is well ventilated, because the battery may produce acid gas when charging.
- Do NOT connect lithium batteries in reverse polarity. Doing so may result in fire or damage to the device.
- Stay away from sparks, as the battery may produce combustible gases.
- During outdoor installation, avoid direct sunlight and rainwater infiltration.
- Ensure that cable connections are tightened and cables are fixed in the system correctly. False connections and corroded cables may cause extreme heat that can melt the cable insulation, burn surrounding areas or cause a fire.
- Ensure the device is installed by competent and trained professionals where required.
- Ensure appropriately sized wiring, fuses and circuit protection devices are used in the installation of this device.
- Connecting live equipment to this device, such as solar panels or batteries, can cause arcing to occur. Ensure all devices are isolated prior to installation where possible and ensure appropriate PPE is worn at all times.

OVERVIEW

The Alvolta Shunt can be connected to the Alvolta app via Bluetooth and can be used on a mobile phone or tablet to facilitate reading of battery parameters, such as state of charge, remaining usage time and historical data. The shunt is suitable for 12V/24V/48V sealed lead-acid battery, gel battery, open battery, lithium battery system, measures 500A charge and discharge current and monitors battery power status, and can also monitor the starting battery voltage.

The Alvolta Shunt is a battery monitor with low power consumption and a high level of safety, reliability, accuracy, and wiring convenience.

FEATURES

- Suitable for sealed lead-acid batteries, gel batteries, open batteries, and lithium battery power measurement.
- Support 12 /24 /36 /48V battery systems.
- Uses high-precision current sampling, capable of measuring 500A charge and discharge current.
- Uses an advanced SOC algorithm to accurately measure battery power and calculate remaining battery life.
- Supports cycle count calculation.
- Supports battery capacity settings.
- Supports RS485 communication with standard Modbus protocol.
- Supports CAN communication function.
- Supports Bluetooth communication for viewing product operating status and battery monitoring parameters.
- Supports low SOC, low voltage, high voltage and overcurrent alarm settings.

WHAT'S INCLUDED

Box Inclusions:

	1x Bluetooth Shunt (500A, as per the box)
	1x Negative Cable 1.5m negative battery connection cable
	1x Positive Cable 1.5m positive battery connection cable

ALVOLTA APP

The Alvolta Bluetooth Shunt features built-in Bluetooth, allowing for monitoring, data logging, and parameter configuration through the Alvolta app.

The Alvolta app is your ultimate companion for monitoring and managing your Alvolta 12V, DC-DC, and off-grid power systems. Built for power and designed for intuitive data display, the Alvolta app keeps you connected to your setup whether you're in a 4WD, RV, or other off-grid scenario.



DOWNLOAD ALVOLTA APP

GET IT ON Google Play

Download on the App Store

Note:

- When connecting components to the Alvolta App, a default PIN may be required. The default PIN is: 123456

INTERFACE & INDICATORS

MAIN INTERFACE

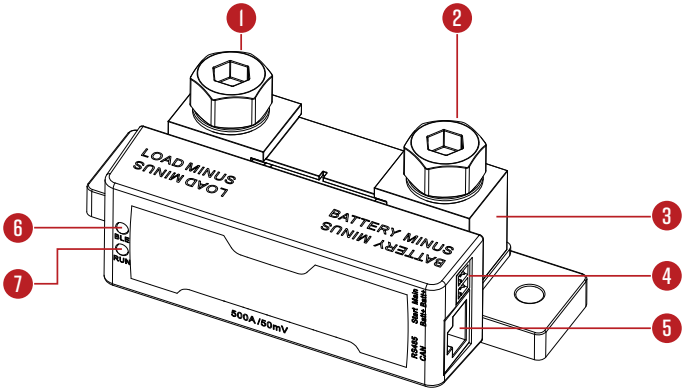

1	Load negative terminal (M10)
2	Battery negative terminal (M10)
3	Current divider
4	Main battery & starter battery positive terminal
5	RJ45 port
6	Bluetooth status indicator
7	Running status indicator

RJ45 COMMUNICATION INTERFACE

Set as communication mode

- The Modbus protocol can be used to perform data monitoring, parameter setting and other operations for the shunt via the port.

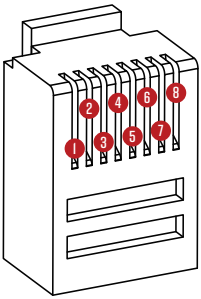

1	CAN_L
2	CAN_H
3	NC
4	NC
5	Power/signal ground
6	D-
7	D+
8	NC

POSITIVE TERMINAL INTERFACE

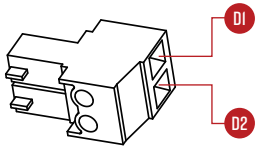

D1	Main battery positive terminal Red 16AWG external cable
D2	Starter battery positive terminal Grey 16AWG external cable

INDICATOR LIGHTS

Indicator Light Specifications:

	Indicator Light	Light Indication	Indication Description
BLE	Bluetooth Status Indicator	Always on	Connected to the app, no data transmission
		Flashing	There is data sending & receiving to the app
		Not on	Not connected to the app
RUN	Running Status Indicator	Red light always on	There is an alarm message
		Green light always on	Normal operation

SPECIFICATIONS

Specifications:	
Supply Voltage	6.5 - 60V
Current Rating	500A
System Voltage Range	12 / 24 / 48V
Current Draw	≤ 15mA
Compatible Battery Types	Lithium, Sealed Lead-Acid, Gel & Open Batteries
Battery Capacity	1 - 9999Ah
Terminal Size	10mm (M10)
Connection Type	10mm Cable Lug
Maximum Cable Size	120mm² (0000AWG)
Current Resolution	± 0.01A
Voltage Resolution	± 0.01V
State of Charge (SOC) Resolution	± 0.1%
Time Accuracy	± 1min
Current Measurement Accuracy	± 0.4%
Voltage Measurement Accuracy	± 0.3%
RS485 Communication	9600 baud, 8 data bits, no parity, 1 stop bit (9600 8N1)
Bluetooth Communication	Built-in Bluetooth, supports app data integration & OTA upgrade
CAN Communication	Supports RV-C protocol
Historical Data	Can store the last 6 days of historical data
Operating Temperature Range	-35°C - +65°C
Ingress Protection	IP21
Cooling Method	Natural heat dissipation
Colour	Black
Dimensions (w x h x d)	120 x 48.3 x 45.9mm
Weight	0.35kg
Warranty	3 Years

Model Dimensions:

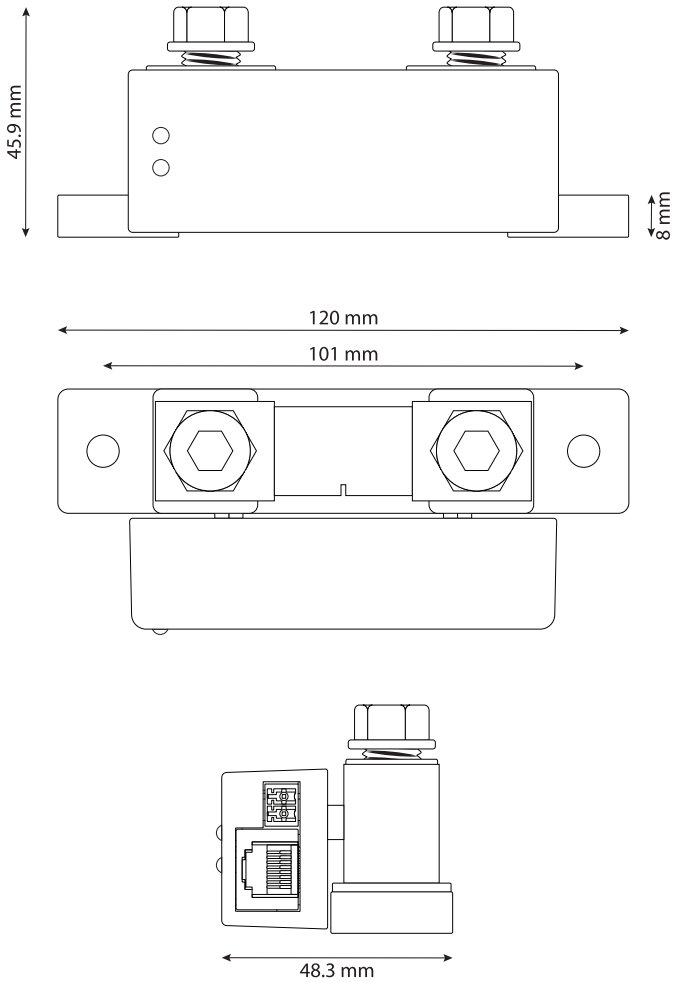

INSTALLATION

PRE-INSTALLATION PRECAUTIONS

- Wiring and installation must comply with national and local electrical codes. The wiring specifications must be selected according to the rated current, generally according to 5A/mm² selected.
- Note that the exposed metal part of the shunt is the negative electrode of the battery during normal operation, and it cannot touch the positive electrode of the battery or other conductors, nor can it be connected to the earth.
- PV arrays may generate very high open circuit voltages. Disconnect all circuit breakers or fuses before wiring and take care during wiring process.
- Follow safety recommendations outlined by the battery manufacturer.

SHUNT INSTALLATION

When installing the shunt, choose a location that will avoid direct sunlight and minimise exposure to high temperatures. Ensure that the installation will provide adequate airflow around the shunt. If installed in a closed container, ensure there is reliable heat dissipation through the container.

1. Install mounting screws

a. Mark the mounting position according to the mounting dimensions of the shunt, drill two mounting holes of suitable size at the two marks and fix the screws on the two mounting holes.

2. Install the shunt

a. Align the shunt's mounting holes with the two pre-fixed screws to hang the shunt up, and then fix the two screws below.

3. Wire the shunt

a. Connect the shunt within the system according to the relevant application outlined by the wiring diagrams.

MONITORING THE MAIN BATTERY

Connect the shunt to the DC energy storage system and battery, set the shunt parameters according to the actual battery parameters, and monitor the battery's state of charge, real-time battery voltage and current, remaining usage time, remaining capacity, protection alarm and other information.

1. Wire the system as per the description below:

a. Connect the positive terminal of the battery to the positive terminal of the DC system in series through a suitable fuse.
b. Connect the negative terminal of the battery to the "BATTERY MINUS" terminal (B) of the shunt.
c. The negative terminal of the DC system is connected to the "LOAD MINUS" terminal (A) of the shunt.
d. Connect the positive terminal of the main battery to the D-D1 port of the shunt (Main Batt+) through the positive power supply line of the main battery.

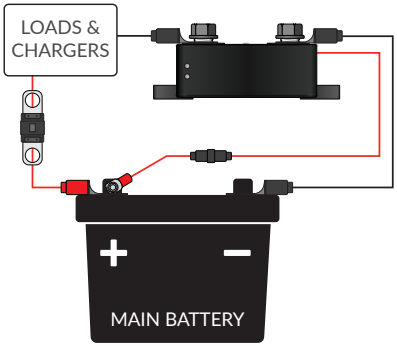

2. Connect to the Alvolta App

a. Download the Alvolta app from the Apple or Google Play store.
b. Follow the app instructions to connect to the Alvolta Shunt.

3. Setting system parameters:

Battery Capacity

a. Set according the total battery capacity of the system

Full Charge Voltage

a. When the battery voltage reaches the trigger voltage, and the current drops below the full charge cutoff current for a duration exceeding the full charge detection time, the shunt will recognise the battery as fully charged, and the SOC will change to 100%. When the battery type is set to lead-acid or lithium battery, the shunt will apply a set of widely-adopted default values. When selecting a custom battery type, these values shall be modified according to the following formulas:
    i. Lithium Battery: Full Charge Voltage = Overvoltage Threshold - (0.2V to 0.3V)
    ii. Lead-Acid Battery: Full Charge Voltage = Float Charge Voltage - (0.2V to 0.3V)

Discharge Cut-off Voltage

a. When the battery voltage drops below this threshold, the shunt will register the battery as fully discharged (SOC = 0%). For preset battery types (lead-acid/lithium), the system applies industry-standard default values. For custom battery types, modify the value according to the following formulas:
    i. Lithium Batteries: Discharge Cutoff Voltage = Under-Voltage Warning + (0.2V ~ 0.3V)
    ii. Lead-Acid Batteries: Discharge Cutoff Voltage = Under-Voltage Warning + (0.2V ~ 0.3V)
    iii. For lead-acid batteries, this value is typically 1.25, while for lithium batteries it is generally 1. This parameter is only adjustable in Custom Battery Mode. If your battery datasheet specifies a different value, enter it in the custom battery settings.

Full Cut-off Current Setting

a. The charging current when the SOC is judged to be 100% during charging, is set according to the battery capacity, generally 4%C.

Full Detection Time Setting

a. The detection time when the SOC is judged to be 100% during charging, the default is 1 min.

Current SOC Setting

a. When the current SOC is known, setting the current SOC can update the SOC more accurately. If not set, the SOC will learn and update according to the internal algorithm.

Synchronise SOC Setting

a. When the battery is determined to be fully charged, synchronise SOC to 100%. If not set, the SOC will learn and update based on the internal algorithm.

Zero Current Calibration

a. When the "LOAD MINUS" terminal (A) is disconnected, pressing calibration will record the current value as zero current.

Depth of Discharge (DOD)

a. Default setting is 5%, used for calculating remaining runtime. When the battery's remaining capacity falls below (DOD × Available Capacity), the remaining runtime will display as 0.

4. Battery alarm setting parameters:

SOC Alarm

a. After this setting is activated, the alarm is turned on when the current SOC is less than the set value, and the alarm is cleared when the SOC is greater than the recovery value.

Over-current Alarm

a. After this setting is activated, the alarm will turn on when the current charge and discharge current is greater than the set value, and will be cleared when the current is less than the recovery value.

Main Battery High Voltage Alarm

a. After this setting is activated, the alarm turns on when the current voltage is greater than the set value, and the alarm is cleared when the voltage is less than the recovery value.

Main Battery Low Voltage Alarm

a. After this setting is activated, the alarm turns on when the current voltage is less than the set value, and it is cleared when the voltage is greater than the recovery value.

Start Battery High Voltage Alarm

a. After this setting is activated, the alarm will turn on when the current voltage is greater than the set value, and will be cleared when the voltage is less than the recovery value.

Start Battery Low Voltage Alarm

a. After this setting is activated the alarm will turn on when the current voltage is less than the set value, and will be cleared when the voltage is greater than the recovery value.

MONITORING THE MAIN BATTERY & STARTER BATTERY

This application adds starting battery voltage monitoring on top of monitoring the main battery. On the basis of the previous wiring, adding the starting battery voltage sampling line.

1. Wire the system as per the description below:

a. Connect the positive terminal of the starting battery to the Start Batt+ port of the shunt (D-D2) through the positive sampling line of the starting battery.
b. Connect the negative pole of the starting battery to the "LOAD MINUS" terminal (A) of the shunt.
c. Connect to the Alvolta app and set relevant parameters as described on page 11.

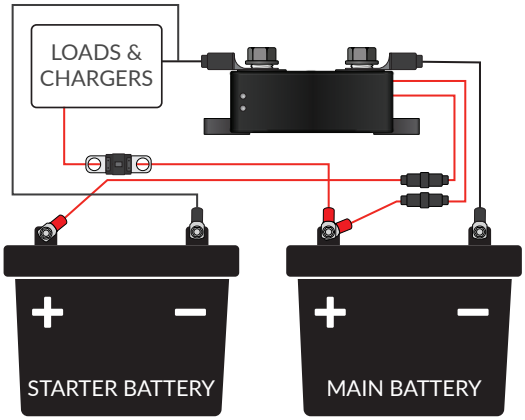

CONNECT TO THE DATA ACQUISITION CONTROL UNIT (CU2)

This application transmits the operating information of the shunt to a data acquisition control unit, and can be simultaneously checked by connecting to the data acquisition control unit through the Alvolta app view the running status of multiple devices or the entire DC system.

On the basis of the previous wiring, add RS485 communication line to access the data acquisition control unit.

1. Wire the system as per the description below:

a. Connect the "RS485&CAN" communication of the shunt to the RS485 communication port of the data acquisition control unit through the communication line. (COM1 ~ COM6).
b. Connect to the Alvolta app and set relevant parameters as described on page 11.

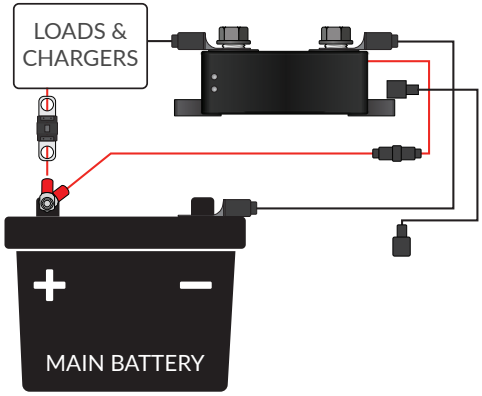

SYSTEM MAINTENANCE

- In order to maintain the best long-term performance for shunts, it is recommended to conduct inspections twice a year.
- Make sure the airflow around the shunt is not obstructed and remove any dirt or debris from the components.
- Check if the insulation layers of all exposed cables are damaged due to sun exposure, friction with other objects nearby, dry rot, destruction of insects or rodents, etc. If so, it is necessary to repair or replace the cable.
- Verify if indicators are consistent with the device operations. If any malfunctions occur or errors are indicated by the device, please ensure corrective actions are taken to maintain the integrity of the device.
- Check all wiring terminals for corrosion, insulation damage, signs of high temperature or burning/discoloration.
- Tighten terminal screws.
- Check for dirt, insects nesting and corrosion and clean as required.
- If the lightning arrester has failed, replace it in time to protect the shunt and other devices in the system from being damaged by lightning or electrical spikes.

Warning: To carry out any of the operations above, please ensure that all power to the shunt has been disconnected. Afterwards, perform a final inspection and commence operation. Operation and maintenance should only be handled by trained professionals where necessary.

TROUBLESHOOTING

Common Troubleshooting:

Issue	Troubleshooting
Indicator light is not on	Make sure the battery and DC system are connected with the correct positive (+) and negative (–) terminals. Also check that the shunt's "Main Batt +" terminal is connected to the battery's positive terminal.
The remaining usage time varies greatly	Check that the shunt settings, including the discharge depth, are configured correctly.
Lithium battery state of charge is inaccurate	Check whether the lithium battery has a built-in BMS (Battery Management System) for charge and discharge protection.
When fully charged, the remaining capacity of the battery is greater than or less than the nominal capacity value of the battery	Because of normal battery charging and discharging behaviour, battery capacity loss over time, and the shunt's self-learning process, the shunt will automatically learn and update the battery capacity under certain conditions.
Charging state of charge deviation is large	Check that the shunt settings are correct and that the shunt has gone through a full cycle from fully charged to discharge cut-off voltage. The battery should also be fully charged regularly. Because batteries naturally self-discharge over time, not fully charging the battery for long periods can cause measurement errors to build up.

WARRANTY INFO

ALVOLTA
BUILT FOR POWER

3 YEAR WARRANTY

At Alvolta, we build all our gear for reliable power. We stand behind the quality and durability of our components. Our product development team rigorously tests our products to ensure they will perform in the Australian climate.

Our goods come with guarantees that cannot be excluded under the Australian Consumer Law. You are entitled to a replacement or refund for a major failure and compensation for any other reasonable foreseeable loss or damage. You are also entitled to have the goods repaired or replaced if the goods fail to be of acceptable quality and the failure does not amount to a major failure.

Alvolta warrants that our products are free from manufacturing defects in material and workmanship for the warranty period. The warranty commences on the date of purchase by the original purchaser. If a defect arises during the warranty period, we will repair, replace or provide an appropriate remedy in accordance with the Australian Consumer Law.

To access the benefits of this warranty, you must retain your proof of purchase and follow any other direction we reasonably give you.

Processing a Warranty Claim

If you believe your product is defective, it must be returned to us for inspection by our warranty claims department. Please contact our customer service team to provide details of the defect. They will assist you through the process of your warranty claim, including how to return the product for inspection.

Once we receive your returned product, our technicians will inspect it. We will then notify you of the outcome of your claim.

If we accept your warranty claim, we will either repair, replace or refund the goods at our discretion. We will also reimburse you for the shipping costs you incurred in sending the goods back to us. Any products that we choose to replace or refund become the property of our company.

If we do not accept your claim, we will advise you of the reason and hold your product for collection. You will need to arrange and pay for the product to be shipped back to you. If your product is not collected within 30 days of your warranty claim being finalised, we may destroy it.

Your warranty is voided if we (at our sole discretion) determine that there is evidence of one or more of the following:

Negligence: Improper installation, improper or extreme use, use that contravenes this instruction manual, etc.

Abuse: Road hazards, damage beyond the limits of "normal wear and tear."

Unauthorised Repair: Repair service performed by an unauthorised service centre.

Disassembly: Any attempt to open, tamper with or otherwise compromise the integrity of the product.

Consequential Damage: Damage to this product caused by the failure of another component of the vehicle or device in which this product is installed.

Note regarding exterior finishes: we use the highest quality materials available, but depending on location, environment and exposure, the colour of exterior surfaces can fade. We will not approve any warranty claims that relate to colour fading.

Discontinued Items

Discontinued items that are still under warranty will be reviewed by our company. If a discontinued item is covered under warranty it may be replaced by an equivalent or superior item. If an equivalent item is not available our company will determine terms of resolution on a case-by-case basis.

ALVOLTA
BUILT FOR POWER



Alvolta Pty Ltd

Ph: 1800 577 408
Email: info@alvolta.com.au
Web: www.alvolta.com.au